ANGLE	± 5°	REV	LOCAS	DESCRIPTION	DESIGN	DATE	卫国峰
X.XXX	± 0.05	01			DRAWN	DATE	尚 伟
X.XX	± 0.15	02			CHECKED	DATE	吴汉学
X.X	± 0.25	03			AUDITED	DATE	龚劲松
X	± 0.50	04			APPROVED	DATE	eric

Specifications/备注（Remark)

1-材料（MATERIAL)
胶芯：LCP UL94V-0
Housing:LCP UL94V-0
端子：磷青铜
Contact：Phosphor bronze
2-特性（characteristics):
额定电流：0.5 AMP.
Raring Current:0.5 AMP .
接触阻抗：≤30mΩ MAX.
Contact Resistance:≤30mΩ MAX.
绝缘阻抗：≥100MΩMIN.
Insulating Resistance:≥100MΩMIN.
耐电压：500V AC/MINUTE
Withstanding Voltage:500V AC/MINUTE
温度范围：-55度至+105度
Temperture Range：-20˚Cto +85˚C

ORDERING INFORMATION

HD - 1 F M B0 A X A

- HDMI
- NO.OF PER ROW: 1=ONE ROW, 2=DUAL ROW
- TERMINAL: M:MALE, F:FEMALE
- CONTACL SHAPE: S:STRAIGHT, R:RIGHT ANGLE, M:SMT
- INSULATOR MATERIAL: A:PBT, B:PA6T, E:LCP
- COLOUR: B:BLACK, L:BLUE
- CONTACT PLATING: FULL OF GOLD A0=0.8u" ... A9=30u"; SEMI-GOLD B0=0.8U" ... B9=30U"
- PACKING: A:PE Bag, B:TUBE, C:TRAY, D:BOX

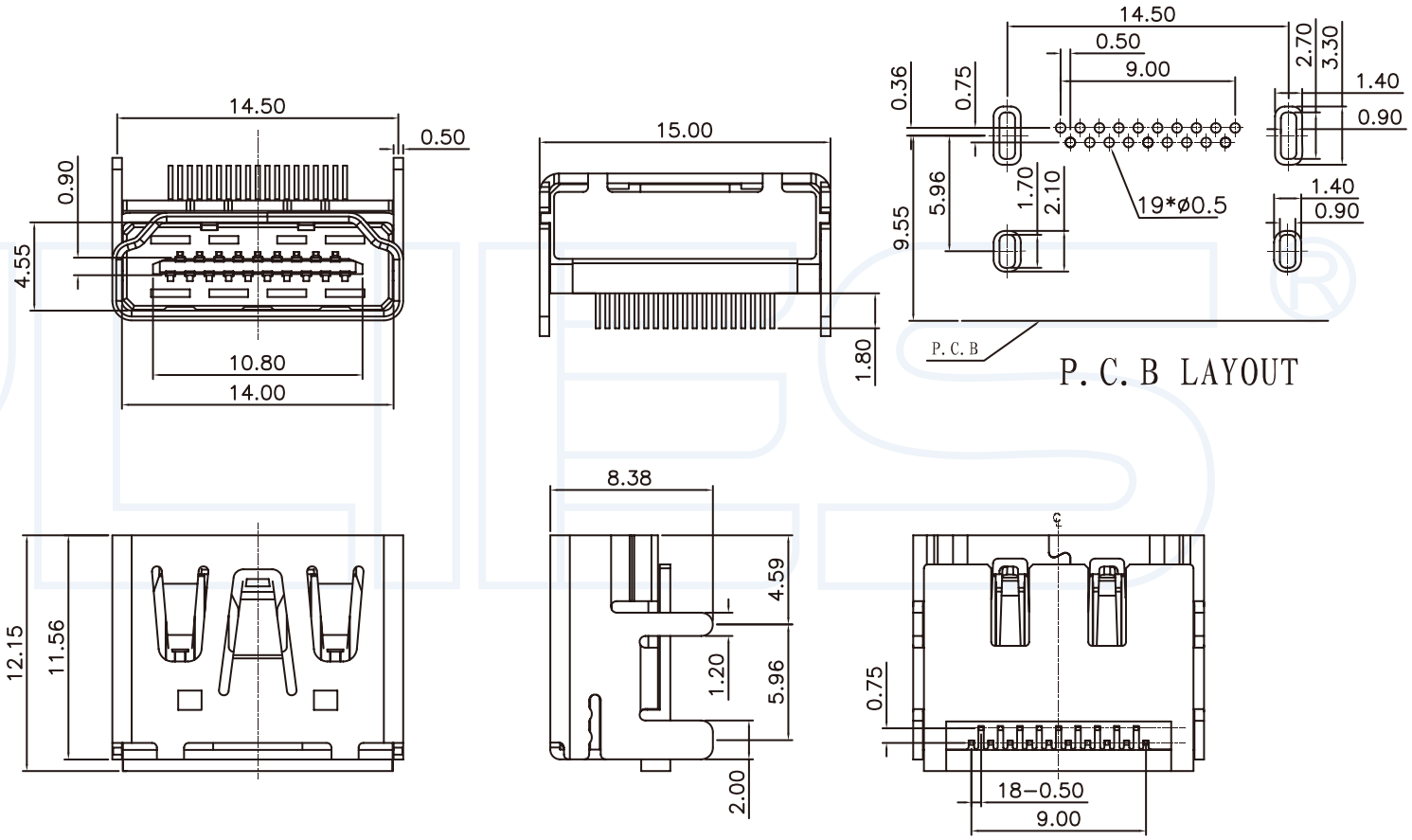

YLIES® 东莞市瑞翔精密连接器有限公司 DONG GUAN YLIES PRECISE CONNECTOR CO.,LTD	TITLE	494-HDMI 母座 双排针90度 DIP1.8			DATE 2018-02-18
Tel:0769-85381995 / Fax:0769-85493987 / Email: ylies@ylies.cn / Web:www.ylies.cn					
PROJECTON	REV A	UNIT mm	SCALE 1:1	PAGE 1/1	PART NO: HD-1FMB0EBD	DRAWING NO: